NOTES:
1. THIS RESERVOIR IS DESIGNED FOR STATIONARY INSTALLATIONS, ANY MOBILE INSTALLATIONS ARE SUBJECT TO FACTORY REVIEW
2. DO NOT SHIP THIS UNIT FULL OF OIL
3. THIS RESERVOIR IS THOROUGHLY CLEANED, A RUST INHIBITOR APPLIED TO THE INTERIOR, AND PRIME PAINTED GRAY PRIOR TO SHIPMENT
4. OPERATING TEMPERATURE IS 180° F MAXIMUM, FOR HIGHER TEMPERATURES CONSULT FACTORY
5. ALL PORTS ARE PLASTIC PLUGGED AND PROTECTED FOR SHIPPING
6. SHIPPED LOOSE: SIGHT GAGE (ALUMINUM)
   FILLER BREATHER (STEEL WITH ZINC TRIVALENT CHROME FINISH)
7. ALL SEALS ARE BUNA N

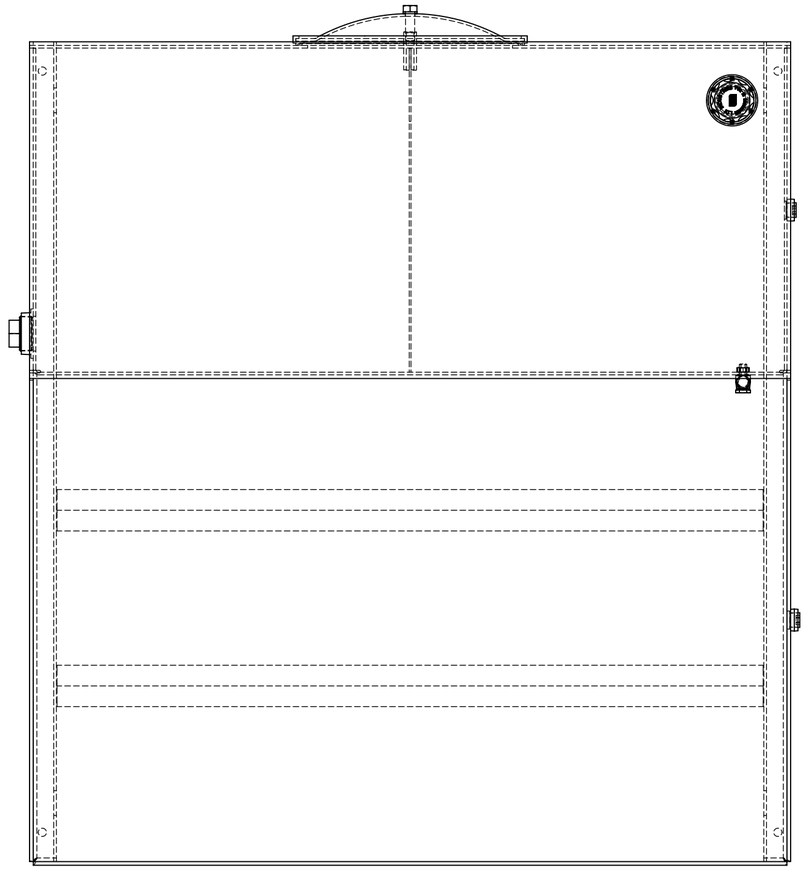

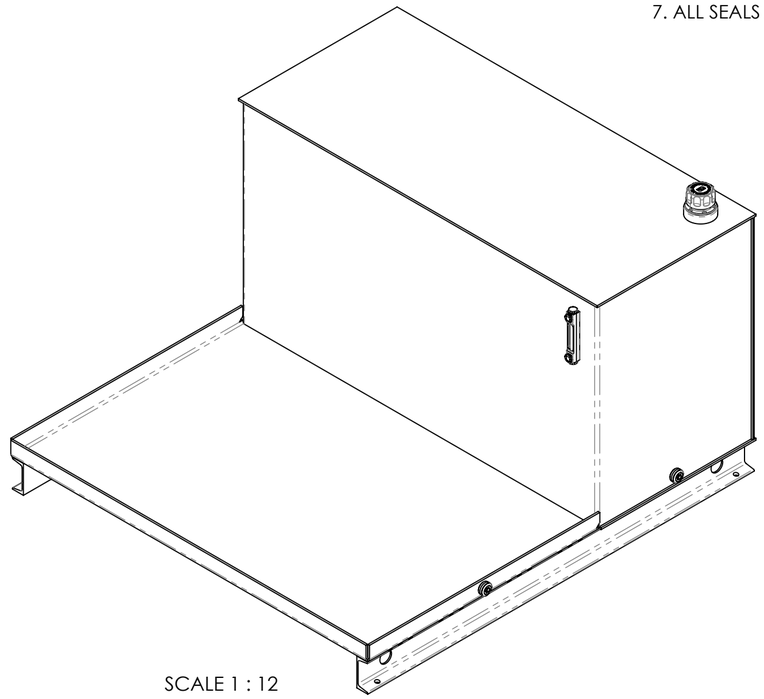

SCALE 1 : 12

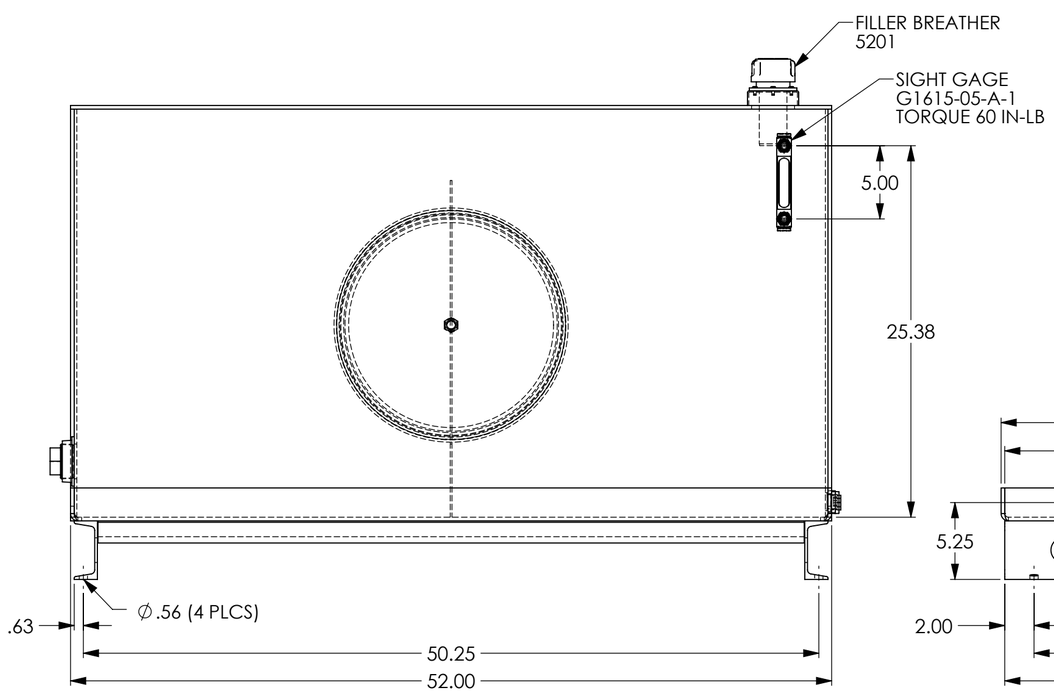

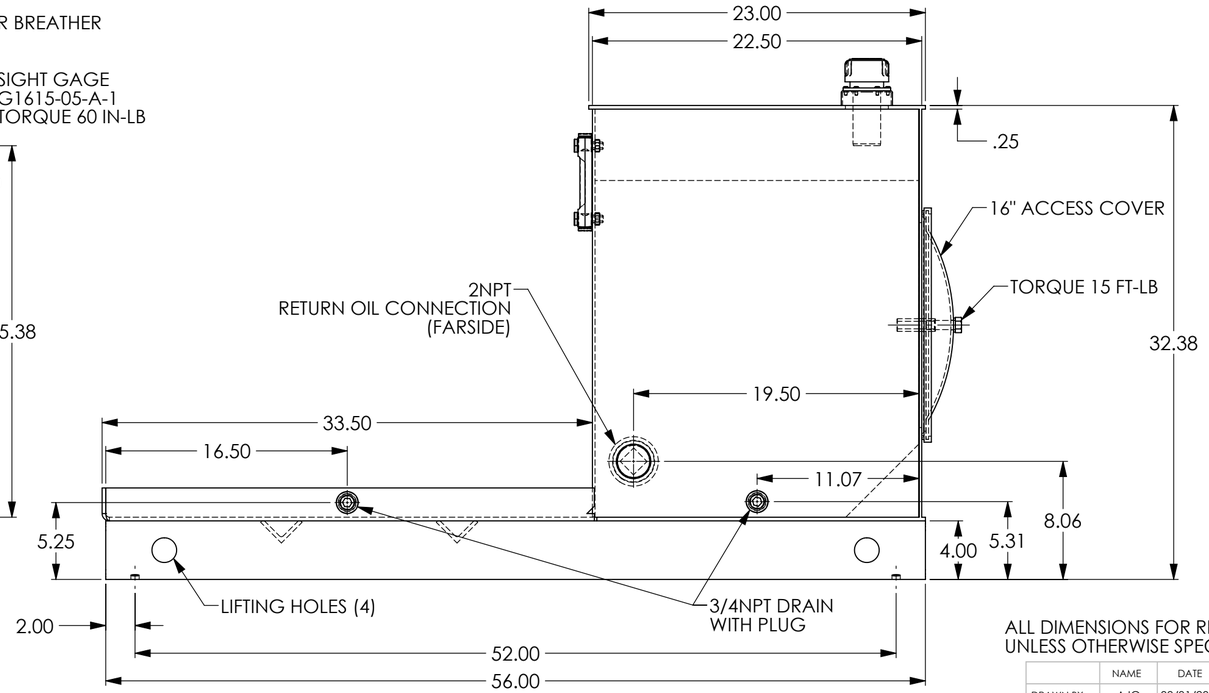

ALL DIMENSIONS FOR REFERENCE ONLY
UNLESS OTHERWISE SPECIFIED ALL DIMENSIONS ARE IN INCHES

	NAME	DATE
DRAWN BY	AJO	08/01/2022
CHECKED BY	AJO	08/01/2022
REVISED BY	-	-

TITLE:
RES_STYLE_D_120GAL_STL_PRM
-

LDI Industries®
MANITOWOC, WI HUNTLEY, IL

THIS DOCUMENT CONTAINS INFORMATION PROPRIETARY TO **LDI INDUSTRIES, INC.** AND IS FURNISHED UPON THE EXPRESS CONDITION THAT THE INFORMATION CONTAINED HEREIN WILL NOT BE DISCLOSED TO ANY THIRD PARTY OR USED DIRECTLY OR INDIRECTLY IN ANY WAY DETRIMENTAL TO THE INTEREST OF **LDI INDUSTRIES, INC.**

MATERIAL	STEEL
FINISH	SEE NOTES
CUST NO	-

ECN NO -

SIZE	DWG. NO.	REV
C	V120VLDWX6SC_REF	A

DO NOT SCALE DRAWING | SCALE: 1:8 | WT(LB): 615.29 | SHT 1 OF 1